# Electric Motorcycle Conversion Notes

**Published:** May 27, 2008
**Updated:** July 28, 2008
October 4, 2008

**adam@therenewableyou.com**

## 1: Introduction:

This document records notes an observations from my conversion of a 1982 Kawasaki KZ550C IC motorcycle chassis to a 48V electric vehicle.

## 2: Goal:

The goal of this project is to explore what is needed and what results are inherent to the 48V conversion of a 1982 Kawasaki motorcycle chassis. In the bigger picture, I work 8 miles from home via flat side streets (30-40mph limits) and feel an EV motorcycle would be a great option for commuting. In this report, expected performance, costs and materials will be explored.

## 3: Starting point:

- 1982 Kawasaki KZ550C that I found in an alley near my house. Frame rust sanded and repainted.
- Rebuilt front suspension ($25 for front fork oil seals, 1 weekend for repair)
- Need-to-be-rebuilt front brake caliper
- Need-to-be-replaced front master brake cylinder (expected ~$80)
- Need-to-be-refurbished electrical wiring system and 12V battery
- Working rear brake
- Flat rear tire, patched with fix-a-flat (temporary repair), 77" circumference.
- In-tact 530 size 62" chain with 36 tooth driven sprocket
- Miscellaneous spare parts from 1978 Kawasaki KZ450, most of which fit on the 1982 frame, including an ignition switch and key.

I started with a chassis I found in an alley near my house. It was in rough shape and needed some refurbishment before I could start the conversion. Most of refurbishment steps are listed above in bullets.

In addition to the repainting and repair of important aspects of the bike, I also needed to remove the IC engine components and the grease caked on from years of IC use. The Clymer manual for this bike was helpful in this process, which was about $18 from [13].

Steps for removing the engine were as follows. I removed the seat and the gas tank. I removed the electrical system wiring and 12V battery holder. I then removed the carburetors (which took a lot of pushing and shoving) and air filter box. I then removed the drive socket cover and removed the drive socket from the engine drive shaft. This allowed me to slip the chain off of the drive socket after loosening the rear wheel to put slack into the chain. I slipped the chain off and let it rest on the rear wheel swing arm and drained the old motor oil.

I then removed all of the engine mounting bolts and pushed the entire engine out of the right side of the bike. This took a lot of effort but it is possible to remove the engine without removing the piston heads as recommended in the Clymer manual. The engine weights about 60-70 lbs, so it was possible to handle with one person. I suggest using a flat car jack to help with engine removal. I will eventually sell the IC parts through Ebay

 

to recoup some of the costs of the conversion. Demand for these parts is currently on the rise due to high fuel costs. The engine is in particularly good shape, along with the original 4 barrel carburetor.

The chassis was the washed in soapy water, rinsed and dried. I used rags and lacquer thinner from the hardware store to remove thick cakes of grease from the underside of the chassis to get a clean surface. The chassis had considerable surface rust, so the following process was used to prep the surface for re-painting. The chassis was sanded, washed, dried, wiped with lacquer thinner, primed with bare metal Rustoleum surface primer and painted with several coats of flat black Rustoleum outdoor paint. The finish was a smooth flat black, much flatter than the shiny finish of the original frame. Figure 3.1 shows the chassis right before re-painting.

**Figure 3.1:** 1982 Kawasaki KZ550C bike chassis during re-painting and prepping of chassis

With a clean frame and working rear-brakes, suspension and driven sprocket system, the bike was ready for introduction of electrical parts.

**4: Planned electrical drive system / components**

After doing research into similar electric motorcycle conversions from a number of resource websites ([1],[2],[3]) I decided the best choice for this bike due to the size of the chassis for batteries / motor and the anticipated use of the bike, was a 48V Etek-RT (72 V rated) motor based system. I do however plan on re-evaluating the bike after initial performance at 48V to see if going to 60V would improve mileage during cruising speeds and increase overall top speeds, although this means purchasing another charger. A list

 

of chosen components and notes concerning why these components were chosen is presented in this section. Figure 4.1 shows screen images of a chassis CAD model I developed to help make sure the larger components listed in this section were going to fit into my conversion space.

**4.1: Motor: Etek-RT**

From research, it is obvious the respect and confidence the community has in the Etek brand brushed permanent magnet DC motors. Since the original Etek production has stopped, Etek has released the Etek-R and Etek-RT (higher torque, lower RPM model) in the original's place. For someone just getting into the EV experience, the Etek brand seemed like an obvious starting point, especially for a chassis with limited space.

As emphasized by the gearing and socket page at [1], the gearing of the EV system is crucial to make sure motors are operating in an efficient regime at full speeds to prevent overheating and potential motor damage. Tech support at [1] (sales@electricmotorsport.com) suggested the general EV rule-of-thumb for these types of motors, that top speed in MPH is generally the same as battery voltage in volts. Therefore, for a 48V battery system, the bike should strive for a top speed of ~48 MPH. This is about the range I was striving for, since I wanted my bike to be more about commuting and less about top speed.

When evaluating the available Etek motors, there are two on the market, the Etek-R and the Etek-RT. The Etek-R has 72 RPM / volt [1] in the loaded condition for a loaded speed of ~3400 RPM, which is close to the value given by the motor specification at this link (http://www.electricmotorsport.com/store/images/EV_Parts/motors/ETEK-Rdiagram.pdf). The more expensive Etek-RT has 50 RPM / volt in the loaded condition for a loaded motor speed of 2400 RPM, as given by technical support [1]. In both cases we want gearing which will lead to a 48-52 MPH top speed. The gearing calculator at (http://www.electricmotorsport.com/store/pdf-downloads/GearRatioCalculator.xls) helps with this calculation.

Using the Etek-R, a 48V system at 3400 RPM with a 10 tooth 530 chain drive sprocket and 52 tooth driven sprocket with 77" drive wheel circumference will deliver a top speed of 48.5 MPH. Using this combination would mean a custom driven sprocket for my conversion. However, using the Etek-RT, a 48V 2400 RPM system with an 11 tooth 530 chain drive sprocket and 38 tooth driven sprocket (the stock sprocket for the 1982 chassis) also gives a 48.5 MPH top speed.

Although the Etek-RT is $75 more expensive than the Etek-R, ~$100 is saved on not having to make a custom, bike specific driven sprocket. Also, the Etek-RT allows for higher voltages in the future if desired. For these reasons the Etek-RT is the motor of choice for my conversion.

**Batteries:**

The two main categories of batteries that I found for EV conversions are the cheaper but fewer lifetime charge cycle lead acids and the much more expensive but 5-7x the lifetime

 

lithium ions. Because this is my first conversion and I am conscious about the project cost, I will use lead acids. Also, most small project EV experience that I researched seems to be with lead acid, so the batteries are tried and true.

From research, a good battery for EV application was the B.B Battery EB50-12, of which EB stands for Electric Bike [4]. Research reveals that this battery is made specifically for electric bike and motorcycle applications. The battery warehouse is in City of Industry, California, which is near my location, so I can save a lot of money on shipping by doing a will-call order from one of many distributors. B.B batteries also seemed to be used on golf-carts and other small, popular EV applications, giving me further confidence in their performance.

Before moving on to controllers, a few words about another popular lead acid brand, Optima Yellow tops. Ben [2] uses these batteries for his 72V electric motorcycle however my research of the specifications sheets for these batteries showed there physical size to be quite a bit larger for a given amp-hour capacity than the B.B batteries and also less lifetime charge cycles than the B.B Battery models. Because of my space limitations and desire to charge the batteries for > 300 cycles, I compared the specification sheets and chose the EB50-12. It should be noted that the Optima batteries do provide better current density performance at high discharge rates, as discussed in several posts at [14].

**Controller:**

From site research [1], the Alltrax controller seems to be the most popular for similar EV conversions. Maximum discharge for the batteries is 750A however the maximum the Etek-RT should ever pull is 140A-160A [1, performance curves]. However, because the Etek-RT has the potential for supporting a 72V battery bank, the controller needs to be rated to this voltage. The Alltrax 7234 is the obvious choice, with a 300A max current and 24-72V operating range.

**Battery charger:**

From research, the Zivan NG1 72V, 12A charger is appeared an obvious choice. However, after contacting [5] to inquire about the purchase of this model, I was directed to another brand of charger, the Quick Charge "Select-a-charge" on-board 48V, 15A charger [6]. Because this unit is made in the USA, it is easier to deal with the manufacture if there are problems. Zivan is made in Italy. The quick charge also gives the % the battery bank has charged so you can expect when the system will be fully charged. It is also programmable to 4 different battery types and is a good deal less expensive than the Zivan.

I also looked at the Battery Tender High Frequency SMT Golf Car charger for 48V at 10A. Battery Tender is a great company and I have 12V 1.5A smart charger from them already. I did not choose this charger because it is more expensive than the Quick Charger and after discussing battery charging with tech support at [1], I was told that the minimum charge current for an EB50-12 was 10A and the batteries in fact do better at

 

higher currents to prevent "sulfite buildup". I therefore chose the Quick Charge for my application.

**Power meter, and pre-scaler:**

I have not purchased these instruments yet, but I am leaning towards the Emeter Link 10 gauge with a 48V pre-scaler. Until then I think a multimeter to monitor battery voltage will do just fine. After several months of using the multimeter as a fuel gauge, I am satisfied with this system and don't think I'll be investing in the Emeter Link 10.

**Other electrical components:**

- Magura twist throttle, 0-5Kohms
- White Rodgers contactor, 200A continuous
- 11 tooth 530 chain (#50 chain) drive sprocket (stock chain from the 82 IC bike)
- Replacement head light assembly from Unlimited Motorcycle Parts, Stanton, CA
- Replacement LED turn signals and brake lights from Ebay.
- Replacement horn from Unlimited Motorcycle Parts, Stanton, CA.

**Purchasing the electrical conversion components:**

Electric Motorsports [1] sells nearly all of the components listed above in an EV kit, which I purchased for this EV conversion. The other parts needed to complete the EV are listed in Table 4.1.

| Component name | Cost per unit ($) | Total units needed | Source |
|---|---|---|---|
| Etek-RT Motor Kit | 1324.54 | 1 | [1] (Kit includes multiple parts) |
| EB50-12 Battery | 125 | 4 | |
| 48V, 15A Charger | 375 | 1 | [6] |
| Alltrax 7234 Controller | - | - | Included in kit |
| Magura twist throttle | - | - | Included in kit |
| White Rodgers Contactor | - | - | Included in kit |
| 11 & 12 tooth drive sprocket and key stock | 39.05 | 1 | McMaster Carr |
| Paint, angle bracket, assorted hardware, electrical connectors | 150 | 1 | Home Depot |
| Fuses, assorted electrical hardware | 20 | | |
| **TOTAL** | 1999.52 | | |

**Table 4.1:** Components from above, suppliers and costs. I did a fair bit of bargain-hunting research.

 

**5: Construction of the bike, Mechanical:**

After the bike frame was cleaned and re-painted, it was ready to start receiving parts for the conversion. Figure 5.1 shows the bike before the addition of any conversion components.

**Figure 5.1:** Picture of the painted bike, ready for conversion

The first step in the conversion was determining how I was going to setup the battery housing and the motor mount. I used a solid modeling program to help with this, modeling the approximate measurements of the frame, and then placing the batteries and motor in their respective locations. Figure 5.2 shows this model.

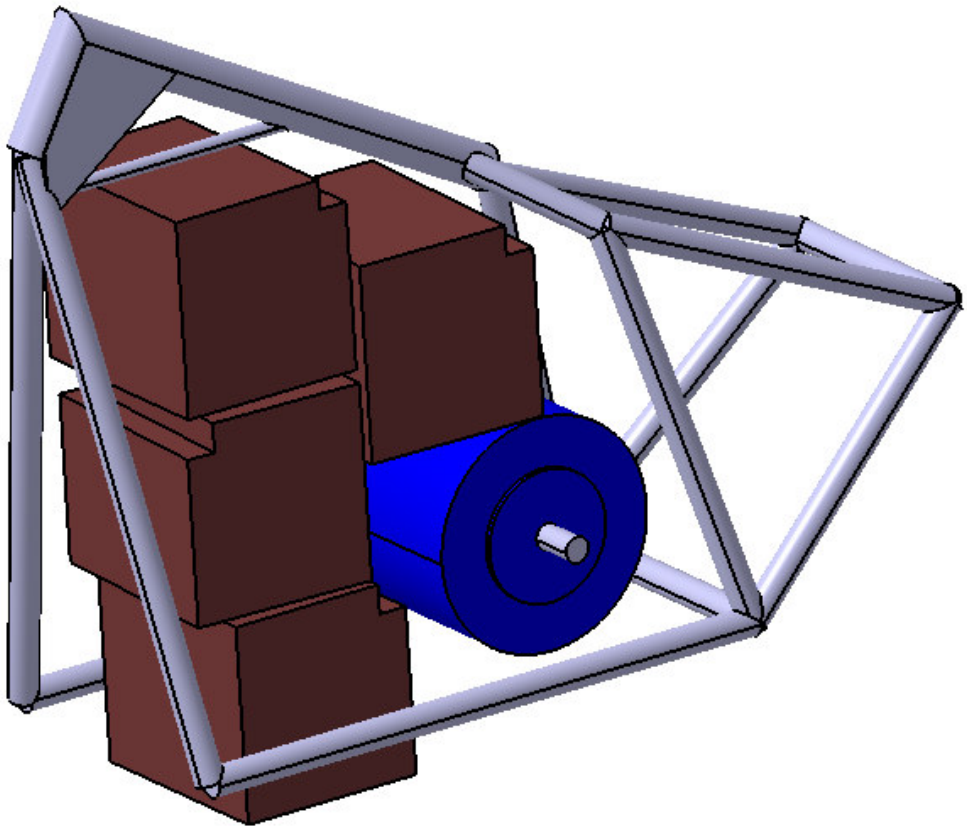

**Figure 5.2:** CAD model image of the battery and motor placement inside the chassis.

I don't have relative access to welding equipment, so I decided to try and do the battery housing with zinc plated steel L bracket from the hardware store. This L bracket is 1/16" thick with 1.25" legs and was easy to cut with a hacksaw or ban saw. I modeled the amount of L bracket I would need to do the battery housing, as seen in Figure 5.3. To attach the L pieces to each other, I used low profile number 10, ¼" screws with flat heads.

I lined the inside of the L bracket housing with 1" thick white packing foam and secured it with hot glue. This provided good shock resistance against both high (such as road chattering) and low (such as pot-holes) frequency vibrations.

 

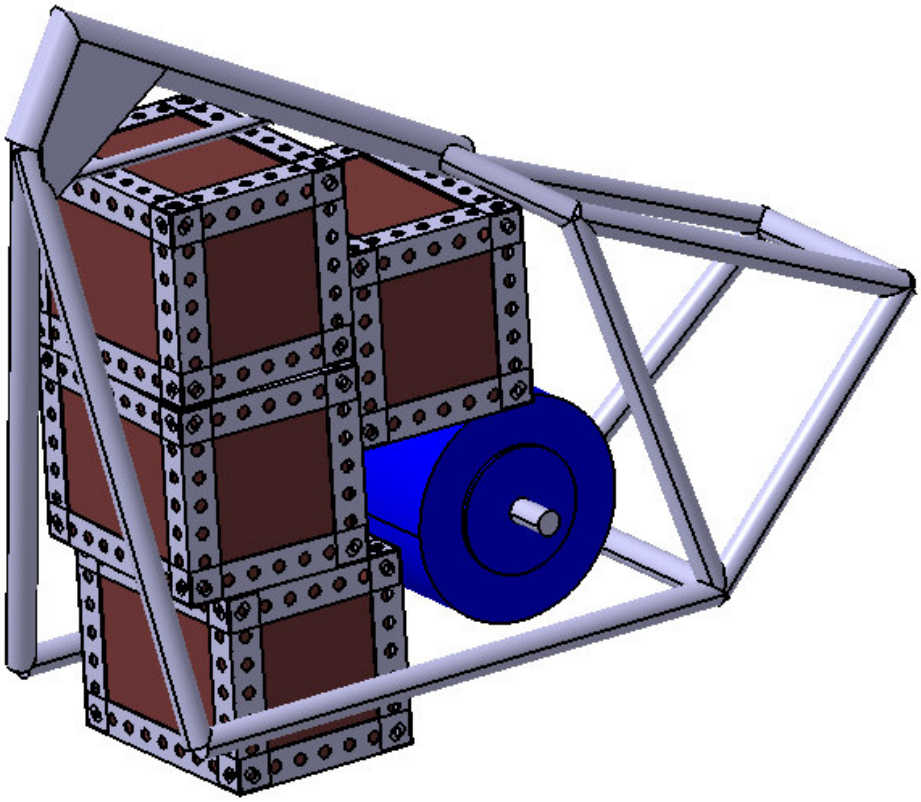

**Figure 5.3:** CAD model with L-bracket battery housing.

To attach the battery housing to the frame I used the IC engine mount locations, not shown in the CAD models, but shown in the photo in Figure 5.4. However, before mounting the batteries to the chassis, I need to make sure I had the motor placement just right.

Figure 5.4 shows the rough placement of the motor and some string to represent the chain placement. I wanted to use the original IC engine mounting locations on the chassis because these areas were designed to take load. Taking some initial measurements I fashioned a prototype motor mount out of 1/2" plywood, as see in Figure 5.5. Plywood turned out to be a great material to use for this first template.

**Figure 5.4:** Rough placement of the Etek-RT motor.

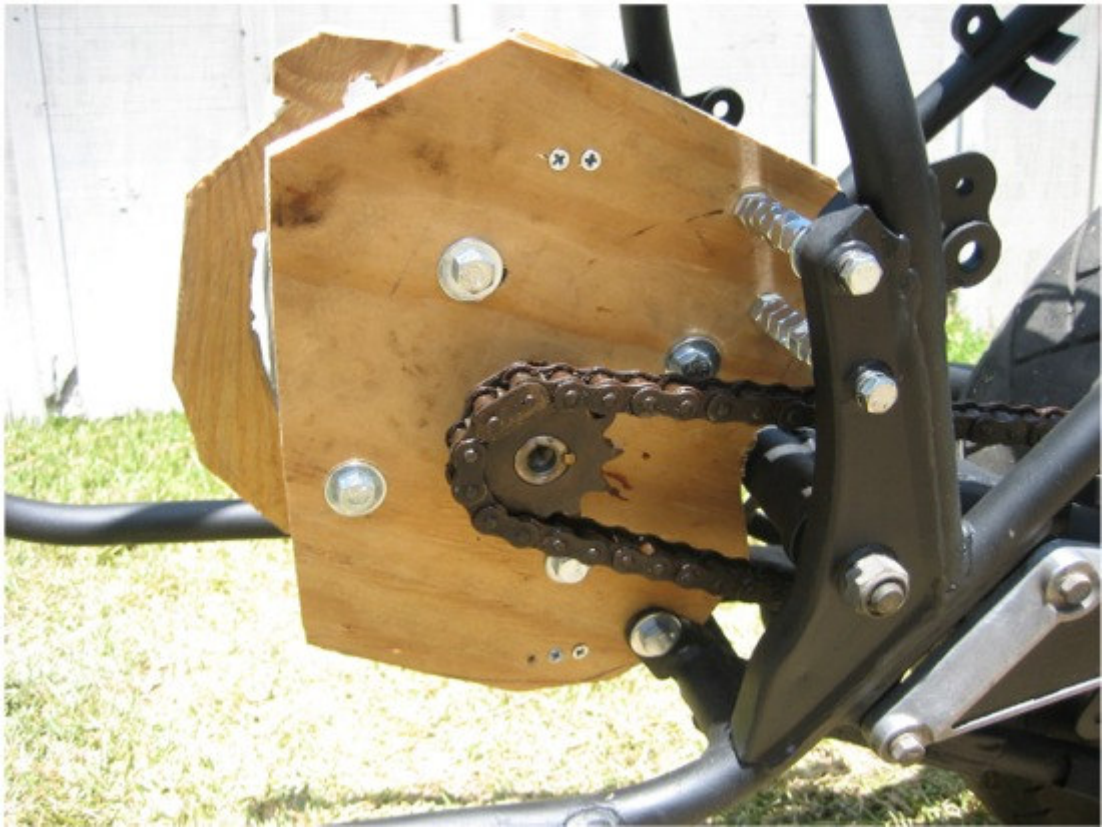

**Figure 5.5:** Construction of the plywood mock up.

I took this prototype and used the CAD software to design a mounting template that I could cut out of ¼" to ½" aluminum plating. The CAD version of the design can be seen in Figure 5.6.

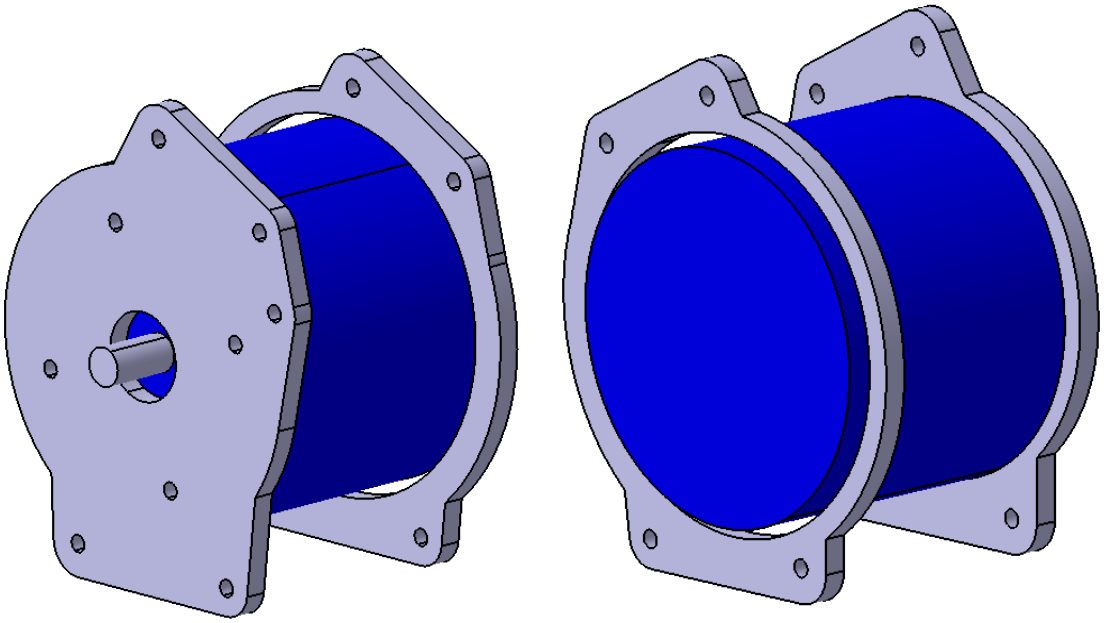

**Figure 5.6:** CAD of aluminum motor mount, from the front (left) and back (right)

First I made paper / cardboard templates of the mount and checked their accuracy against the bike frame, making a few minor adjustments. After acquiring ¼ inch aluminum plate, a friend of mine used his machine shop to cut, drill and finish the motor mounting plates. This installation can be seen in Figure 5.7.

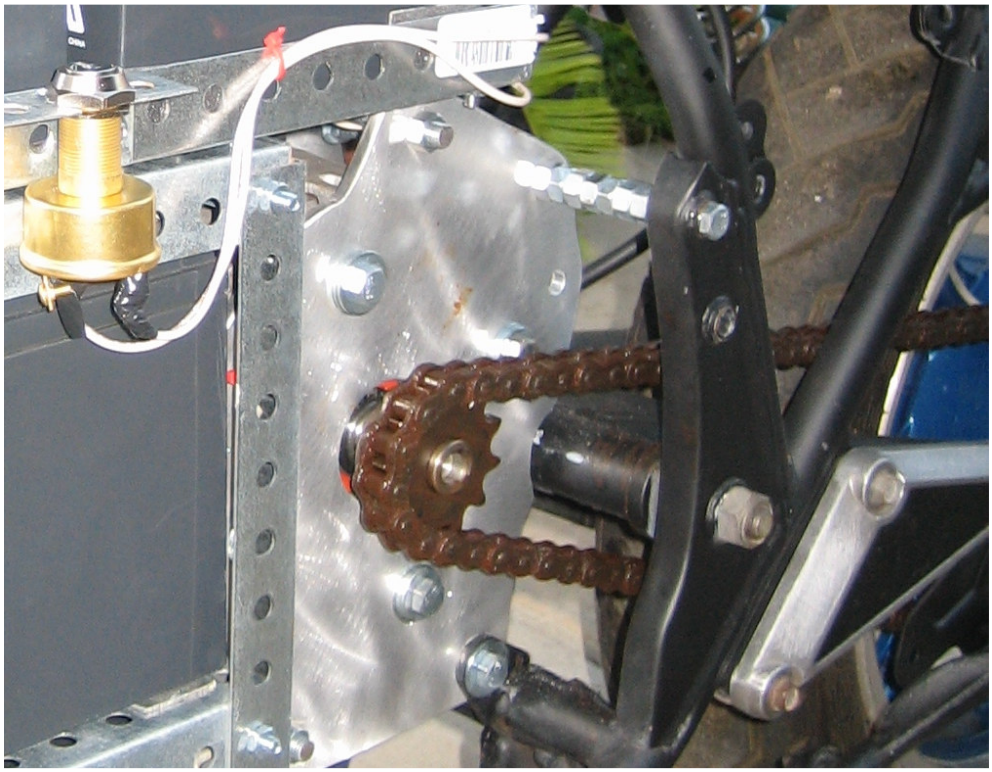

**Figure 5.7:** Aluminum cut and motor mounted to the chassis.

 

Figure 5.7 also shows the location of the chain with respects to the electric motor, and how the chain works itself back to the driven sprocket.

With the motor now in place, the batteries could be placed into the bike chassis to see how everything is going to fit. Figure 5.8 shows the first placement of the batteries with about ½ of the cut angle bracket.

**Figure 5.8:** First attempt at battery placement.

The placement of the batteries ended up slightly different than planned in Figure 5.3 due to features in the frame not captured so accurately by the computer modeling. However, the most important thing to note is that the batteries fit without compromising the desired *thin* aspect ratio of the bike. Figure 5.9 shows the bike after the batteries are fully fastened to the frame and wiring is routed to the key switch. The gold key switch shown in Figure 5.9 is a temporary switch until I got around to tying the controller into the stock ignition on the bike.

 

**Figure 5.9:** Close up of the battery housing to the frame, with attached key-switch.

The battery housing is attached to the bike chassis in 5 places, as well as two support tabs from the battery housing to the bike chassis near the bottom of the housing on both right and left sides. These connection and support points keep the battery housing from *relaxing* and coming apart after undergoing road vibrations.

Next, we had to install the battery charger, which can be seen in Figure 5.10. This charger was roughly the size and weight of an additional EB50-12 battery, so I wanted to keep it as close to the center axis of the bike as possible to maintain equal weight distribution.

 

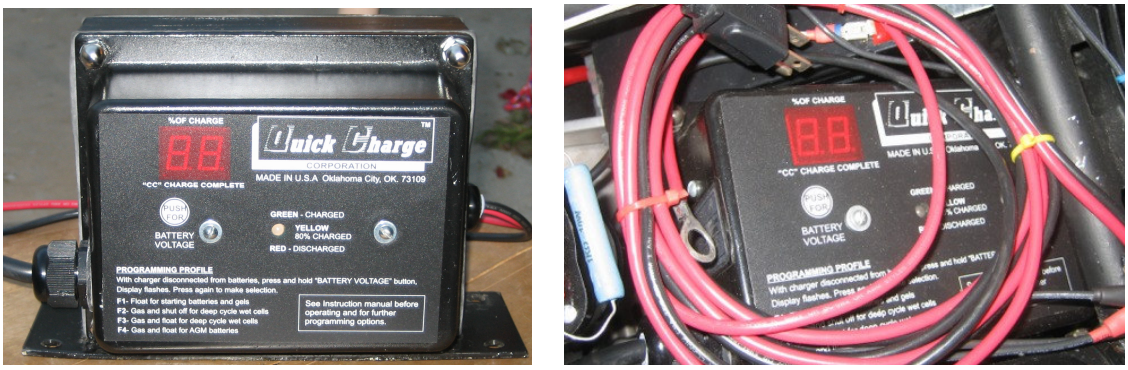


**Figure 5.10A, B:** Battery charger, Battery charger installed under the seat.

The controller for the bike was mounted on the left side, first with zip-ties to make sure eve thing fit nicely. I mounted the controller so I could see the "ON" LED while starting and riding the bike as well as allow for airflow during operation. Figure 5.11 shows the side of the bike with the controller installed.

**Figure 5.11:** Bike with the controller installed on the left side (inside the blue circle).

The White Rodgers 48V coil contact was installed near the front of the controller, underneath the seat of the bike. It is attached to the back of the battery housing and allow for short wire distances between the battery bank, controller and contactor. Figure 5.12 shows the location of the contactor mounting underneath the seat.

 

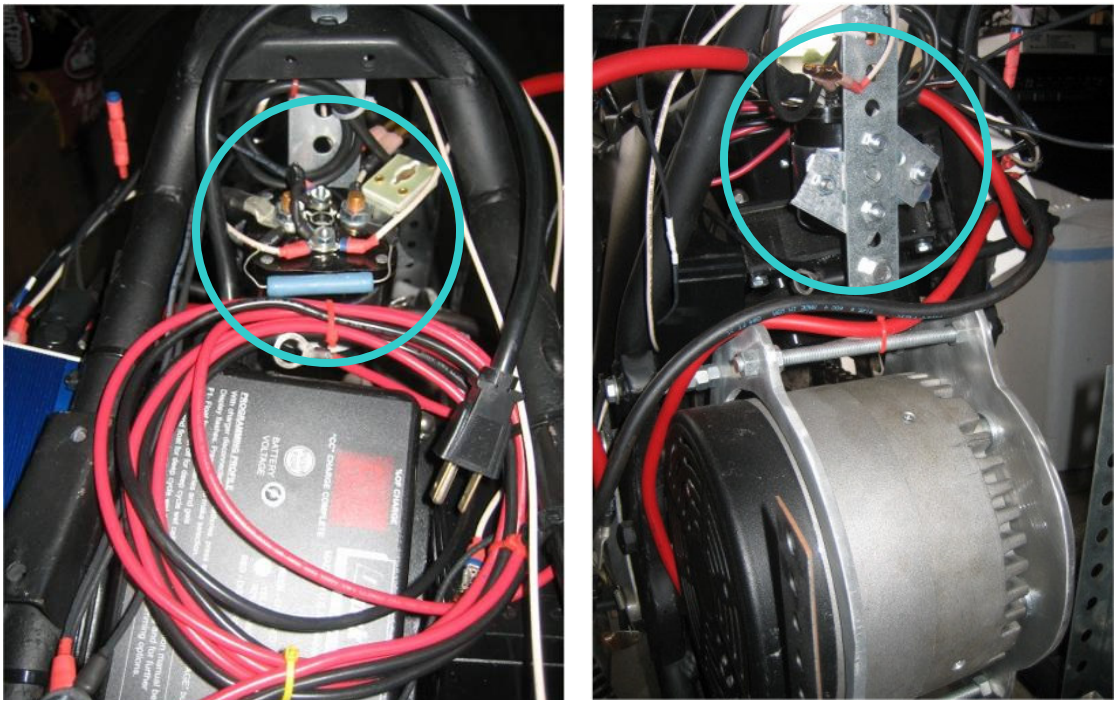

**Figure 5.12:** Contactor (blue circle) mounting under the front of the bike seat.

**Finishing touches, the custom Fairing:**

Many DIY electric motorcycle creators have modified the stock fairing from their converted bikes to fit on their electric bikes. Since my bike is an older model and the fuel tank was very well beat up, this is not what I wanted to do with my project. Also I wanted to give the bike a truly original look so that there was no doubt in an on-lookers mind that there was definitely something different about this machine.

I started playing with some fairing ideas in my design notebook and then purchased some foam board which I spray painted black and bolted onto the side of my battery housing. Some of the results of this can be seen in Figure 9.2. In thinking about what material to use for the fairing, I found the following reference [12] which sells sheets of 1/16" black extruded plastic made from recycled plastics. After obtaining a sample from [12], the plastic contains all the properties I was looking for. It was flexible, not brittle, yet extremely rigid. It was UV treated so as to be stable in the sunlight and I could cut it with pruning sheers, a big plus when I'm forming it into my custom chassis. A 48" x 96" piece of this material is $14 plus $50 shipping.

I cut the first prototype of this 3 piece plastic fairing, one piece for the left side, one for the right and one bent piece for the center. I have enough material for one more final version of the chassis, but the current chassis can be seen in Figure 8.3. I also cut a small right side auxiliary battery cover, also seen in Figure 9.3. The auxiliary battery used to power the 12V lighting and horn system is discussed in the next section.

**6: Construction of the bike, Electrical**
**6.1: Construction of the electrical drive circuit**

 

The wiring of the electrical drive nearly identically followed the wiring diagram from [11], with a few changes highlighted in blue. This diagram is presented below in Figure 6.1.1 for reference.

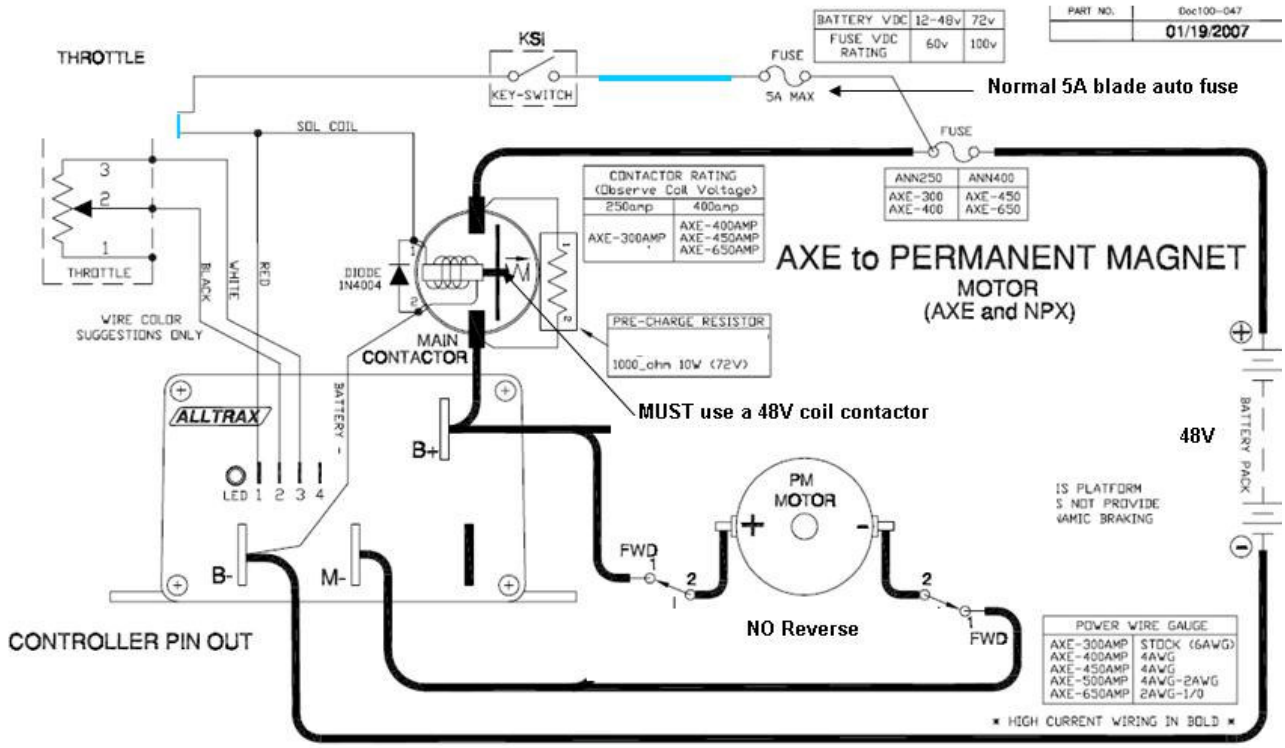


**Figure 6.1.1:** The wiring diagram followed for the electrical drive circuit.

There are a few key differences between the diagram in Figure 6.1.1 and the diagram at [11]. First, the wiring of the EMC does not have a reverse switch. Like a normal motorcycle, this bike cannot go in reverse.

Second, there is no additional footswitch to provide power to the controller. Third, in the low current circuitry, there is no MR752 reverse protection diode. After talking with Martin at [1], he disclosed that the reverse protection diode at that location was more or less optional. In addition, the 5A fuse in the circuit does not have to be rated for 48V and a normal blade style automotive fuse can be used in this location.

Fourth, it is noted that the coil voltage as well as the high current pathway of the contactor must both be rated for 48V. Fifth, a 1000Ω pre-charge resistor is used for the 48V application and the 72V application although specified differently on [11].

Lastly, I need to add an emergency high current kill switch to the cycle, which will change the wiring diagram slightly. For now I will leave it unaltered as to the location of this kill switch.

Other than these minor adjustments, the wiring of the drive system is very simple and follows very close to the document referenced at [11]. An overall tip about the system wiring, you want to try and keep the high current wires as short as possible, therefore, as

 

seen in pictures throughout this description, I try to tightly locate the components of the system, meaning the batteries, motor, contactor and controller.

### 6.2 Construction of the 12V auxiliary circuit

This motorcycle, like all other motorcycles, uses a 12V electrical system to run the lights and horn. First, I will discuss what is used to power this circuit. In addition, most of the electrical load components were missing from the rolling chassis when I found the bike, so I had to re-install these components from a variety of sources.

First, many people during electric conversions use a DC to DC voltage converter to siphon power from the battery pack to power the 12VDC auxiliary components. DC to DC converters cover a very wide price and size range depending on your needs and source. For example, some can be purchased on Ebay for as little as $20-$30 and are small (small current capability as well) and other are much larger and run in the $200 range [1].

Another option for this circuit is to add a stand-alone battery to run the 12V circuit and charge this battery along with the pack after the bike is ran down. Because I had access to a free 12V, 7Ah AGM SLA battery and already owned a 12V, 1.5A charger [9] I decided to use this battery to power my auxiliary circuitry. Plus, this allows me to save all of my energy for use in powering the motor. Figure 6.2.1 shows the placement of this auxiliary battery on the right side of the bike.

**Figure 6.2.1:** Location of the auxiliary battery on the right side of the bike (inside blue circle) Location of the head lamp bucket (inside the green circle).

Now onto the components which are powered by this auxiliary battery. The most important of these components are the brake and head lights. The brake light housing was still attached to the rolling chassis when I found it, so I did not have to do any replacement of this part. However, the chassis did not come with a head light assembly,

 

so I had to go to my local salvage yard and get a similar part. I got the bucket with a lamp and reflectors off of a late model Kawasaki for $40.00 from [8]. These were first installed with uni-strut, as seen in Figure 6.2.1, until I had time to clean up the stock head light brackets, as seen in Figure 6.2.2. The stock head light brackets from my KZ450 parts bike were a good fit, but needed sanding, cleaning and priming with Rustoleum clean metal primer.

**Figure 6.2.2:** Rebuilt head light and LED turn signals (green circles) using refurbished head light brackets.

I also had to get a replacement horn, since the one on the rolling chassis was broken. The horn is a standard 12VDC, 3A device which I tested with a spare car battery. When no sound was produced, I went back to [8] and picked up a used horn for $10.00

I ordered a set of 4 LED turn signal from a Taiwanese supplier on Ebay. As discussed in the next section, using LED lighting meant significantly longer lifetimes when using my auxiliary batteries. LEDs are far more efficient than incandescent lighting which makes a big difference when you're carrying your electrons with you. Figure 6.2.2 shows the front LED turn signals connected to the mounting portions of the front headlamp.

I also made the decision to use LED brake lights. This is discussed further in the next section of the report.

**Wiring and efficiency improvements**

For total auxiliary system control, I've wired a switch under the seat of the bike. This is so I can turn the auxiliary power system on and off independent of the motor battery pack. Therefore, when I am non-street riding of the bike, I can save power from the auxiliary battery with this switch. I may move the switch to the handlebar for easier

access, or link it through the ignition eventually; however, right now this system seems to be working quite well.

One of the first things I discovered with the auxiliary lighting was the amount of current used by the incandescent bulbs. The brake lights used 30W, and the head light 50W, for a total continuous power of 80W, which is 6.6A. For a 7Ahr battery, it wasn't long before the battery was drained, and in fact it was draining faster than the bike was running. Not a good situation.

In order to increase the efficiency of my lighting, I ordered some LED brake lights from [10]. For the brakes, I used two 24 LED Bayonet based bulbs with an 1157 type connector. The low beam current draw for each LED bulb is 0.020A, compared to 1.25A for an incandescent bulb. That's 62.5x more efficient! The bulbs are shown in Figure 6.2.3.

**Figure 6.2.3:** The LED bayonet brake lights under low beam operation.

For the head light, I ordered a LED daytime running lamp, but after installation, it was not nearly as bright as the incandescent counterpart and also most likely not road legal. I will continue to look for ways to increase the efficiency of the head lamp, but for now I am stuck with the incandescent.

As described above, I also ordered 4 LED turn signals from an Ebay supplier. A word of caution if deciding to go to LED turn signals, it is most likely that your stock bike turn signal flasher will not work with LED signals. Incandescent turn signal flashers depending on a certain level of current draw to trip the flasher relay. LED turn signals draw hardly any current, and the flasher will not flash. Therefore, you will need to

 

purchase a solid state turn signal flasher, such as the 60 fpm model at [15]. This will allow for flawless flashing of your new, more efficient LED signals.

Overall, the use of LED lighting should significantly increase my auxiliary battery lifetime and allow me plenty of juice to power the lights during my trips between charging.

**7: Legal registration of the bike**

This is my least favorite part of the project. Since the start, I have been doing a fair amount of research about registering the bike, but have yet to take any real steps to complete the process. This is especially tough for my bike because I do not own a title for the bike, and the bike still has a VIN.

So far, I have called the CA DMV about 4 times, each time getting a separate set on instructions. Frustrated, I called the CA CHP directly for a clearer path. A local CHP VIN officer told me to do the follow to get the registration process started:

1. Take the bike to the DMV and fill out a Reg 124 form and go through the DMV vehicle inspection process. Of course, pay the fees.
2. After working through questions with the DMV, call CHP and make an appointment. The CHP VIN officer will inspect the bike and the VIN number.

Like I stated, I have yet to start this process and will report my progress and headaches once I have.

**8: Expected system performance**

Using [3], I was able to find information from one motorcycle conversion project which stated the bike used 5000W to sustain a speed of about 50 mph (no reference). Using this data point and some assumptions about air resistance and coefficient of drag, I was able to calculate the following data.

**Method:**

Using some simple equations and the single data point we can make some assumptions about power usage with the electric motorcycle.

$P = V * F_d = vi$, where P is power (W), V is velocity(m/s) and Fd is force of drag (Nm/s^2) , v is voltage (V) and i is current (A).

$F_d = \frac{1}{2}\rho V^2 C_d A$, where p is air density (kg/m^3), V is velocity (m/s), Cd is drag coefficient and A is frontal area (m^2)

Since we know that 5000W is used at 50mph, we can calculate the product of the constants $\frac{1}{2}\rho C_d A$ and get 0.47603 (N/m). This is of course assuming a steady speed at

 

50mph (no acceleration) and all drag except aerodynamic drag is negligible ( a safe assumption at higher speeds, but not at lower speeds).

We can then use the value for $\frac{1}{2}\rho C_d A$ to interpolate the power needed for speeds from 0-50mph, again assuming stead speed. Then, since power is also battery voltage multiplied by battery current divided by motor efficiency (assume 0.9% from [1], Etek-RT performance curves) we can determine the amount of current needed from the batteries to maintain the given speed.

My batteries are rated to 50Ahr, however I only want to discharge ½ way to prevent damage and reduced charging cycles to the batteries. Also, the batteries discharge differently at different current amounts, a characteristic which I interpolated from off of the EB50-12 specification sheet [4]. All of these results were plugged in and the range of each steady speed was calculated, as seen in Table 8.1. Therefore, for a steady speed of 36 mph, the bike should achieve around 12 mile range with only 50% discharge. That is the perfect amount to get to my work location.

| Power needed (watts) | Speed (m/s) | Speed (mph) | Battery voltage (V) | Battery Current (A) | Discharge time (hours) | Discharge time @ 50% DOD | Range (miles) | Amp hours used (Ahr) |
|---|---|---|---|---|---|---|---|---|
| 0.00 | 0.00 | 0.00 | 48 | 0.00 | 0.00 | 0.00 | 0.00 | |
| 0.06 | 0.50 | 1.12 | 48 | 0.00 | 18150.12 | 18150.12 | 20300.00 | 25.00 |
| 0.48 | 1.00 | 2.24 | 48 | 0.01 | 2268.76 | 2268.76 | 5075.00 | 25.00 |
| 1.61 | 1.50 | 3.36 | 48 | 0.04 | 672.23 | 672.23 | 2255.56 | 25.00 |
| 3.81 | 2.00 | 4.47 | 48 | 0.09 | 283.60 | 283.60 | 1268.75 | 25.00 |
| 7.44 | 2.50 | 5.59 | 48 | 0.17 | 145.20 | 145.20 | 812.00 | 25.00 |
| 12.85 | 3.00 | 6.71 | 48 | 0.30 | 84.03 | 84.03 | 563.89 | 25.00 |
| 20.41 | 3.50 | 7.83 | 48 | 0.47 | 52.92 | 52.92 | 414.29 | 25.00 |
| 30.47 | 4.00 | 8.95 | 48 | 0.71 | 35.45 | 35.45 | 317.19 | 25.00 |
| 43.38 | 4.50 | 10.07 | 48 | 1.00 | 24.90 | 24.90 | 250.62 | 25.00 |
| 59.50 | 5.00 | 11.18 | 48 | 1.38 | 18.15 | 18.15 | 203.00 | 25.00 |
| 79.20 | 5.50 | 12.30 | 48 | 1.83 | 13.64 | 13.64 | 167.77 | 25.00 |
| 102.82 | 6.00 | 13.42 | 48 | 2.38 | 20.00 | 10.00 | 134.21 | 23.80 |
| 130.73 | 6.50 | 14.54 | 48 | 3.03 | 17.24 | 8.62 | 125.31 | 26.08 |
| 163.28 | 7.00 | 15.66 | 48 | 3.78 | 13.21 | 6.61 | 103.43 | 24.97 |
| 200.83 | 7.50 | 16.78 | 48 | 4.65 | 10.00 | 5.00 | 83.88 | 23.24 |
| 243.73 | 8.00 | 17.90 | 48 | 5.64 | 8.18 | 4.09 | 73.20 | 23.08 |
| 292.34 | 8.50 | 19.01 | 48 | 6.77 | 6.58 | 3.29 | 62.56 | 22.27 |
| 347.03 | 9.00 | 20.13 | 48 | 8.03 | 5.00 | 2.50 | 50.33 | 20.08 |
| 408.14 | 9.50 | 21.25 | 48 | 9.45 | 4.41 | 2.21 | 46.91 | 20.85 |
| 476.03 | 10.00 | 22.37 | 48 | 11.02 | 3.67 | 1.84 | 41.07 | 20.23 |
| 551.06 | 10.50 | 23.49 | 48 | 12.76 | 4.00 | 2.00 | 46.97 | 25.51 |
| 633.60 | 11.00 | 24.61 | 48 | 14.67 | 2.61 | 1.30 | 32.09 | 19.13 |
| 723.98 | 11.50 | 25.72 | 48 | 16.76 | 2.22 | 1.11 | 28.60 | 18.63 |
| 822.58 | 12.00 | 26.84 | 48 | 19.04 | 2.00 | 1.00 | 26.84 | 19.04 |
| 929.75 | 12.50 | 27.96 | 48 | 21.52 | 1.65 | 0.82 | 23.05 | 17.74 |
| **1045.84** | **13.00** | **29.08** | 48 | **24.21** | **1.43** | **0.72** | **20.82** | **17.34** |
| 1171.21 | 13.50 | 30.20 | 48 | 27.11 | 1.25 | 0.63 | 18.88 | 16.95 |
| 1306.23 | 14.00 | 31.32 | 48 | 30.24 | 1.20 | 0.60 | 18.79 | 18.14 |

| | | | | | | | | |
|---|---|---|---|---|---|---|---|---|
| 1451.24 | 14.50 | 32.44 | 48 | 33.59 | 0.97 | 0.48 | 15.70 | 16.26 |
| 1606.60 | 15.00 | 33.55 | 48 | 37.19 | 0.86 | 0.43 | 14.38 | 15.93 |
| 1772.68 | 15.50 | 34.67 | 48 | 41.03 | 0.76 | 0.38 | 13.21 | 15.63 |
| 1949.82 | 16.00 | 35.79 | 48 | 45.13 | 0.68 | 0.34 | 12.16 | 15.34 |
| 2138.39 | 16.50 | 36.91 | 48 | 49.50 | 0.67 | 0.33 | 12.30 | 16.50 |
| 2338.74 | 17.00 | 38.03 | 48 | 54.14 | 0.55 | 0.27 | 10.40 | 14.80 |
| 2551.22 | 17.50 | 39.15 | 48 | 59.06 | 0.49 | 0.25 | 9.65 | 14.55 |
| 2776.21 | 18.00 | 40.26 | 48 | 64.26 | 0.45 | 0.22 | 8.97 | 14.31 |
| 3014.04 | 18.50 | 41.38 | 48 | 69.77 | 0.40 | 0.20 | 8.35 | 14.08 |
| 3265.09 | 19.00 | 42.50 | 48 | 75.58 | 0.37 | 0.18 | 7.80 | 13.86 |
| 3529.70 | 19.50 | 43.62 | 48 | 81.71 | 0.33 | 0.17 | 7.29 | 13.65 |
| 3808.24 | 20.00 | 44.74 | 48 | 88.15 | 0.31 | 0.15 | 6.83 | 13.45 |
| 4101.06 | 20.50 | 45.86 | 48 | 94.93 | 0.28 | 0.14 | 6.40 | 13.26 |
| 4408.51 | 21.00 | 46.97 | 48 | 102.05 | 0.20 | 0.10 | 4.70 | 10.20 |
| 4730.96 | 21.50 | 48.09 | 48 | 109.51 | 0.24 | 0.12 | 5.66 | 12.89 |
| 5068.77 | 22.00 | 49.21 | 48 | 117.33 | 0.22 | 0.11 | 5.33 | 12.72 |
| 5422.28 | 22.50 | 50.33 | 48 | 125.52 | 0.20 | 0.10 | 5.03 | 12.55 |

**Table 8.1:** Expected system performance, showing expected range for different steady speeds. Blue boxes show data pulled off the EB50-12 discharge curves. All data in between is interpolated.

## 9: Actual system performance:

### Notes from the first ride:

The first test-drive of the EMC was Sunday, July 6, 2008. The top speed of operation on this day was 40mph and the bike was ridden for several miles. The battery pack did not go to its minimum operating voltage of 44V, so further driving would have been possible.

The acceleration of the bike from 0-25mph is very quick, with acceleration at high speeds starting to die out. Further drive testing should be completed during the week.

### Notes from the next few rides:

As of July 21, 2008, the EMC has been fully exercised in its range of intended use. The bike has been pushed to the limit, reaching and sustaining 50mph on flat ground. On one charge the bike has traveled over 20 miles, with the controller set at reaching a battery voltage no lower than 44V for the pack. This means that as the bike pack dies down, the top speed and acceleration of the bike diminishes to stay above this 44V threshold.

**Figure 9.1:** The EMC after the first ride, July 6, 2008.

**Figure 9.2:** The EMC as of July 21, 2008, after the first few break-in rides.


**Figure 9.3:** The BattCycle as of August 18, 2008. The custom plastic fairing has been added with adjusted front brakes, and, of course, two TheRenewableYou.com project stickers.

**Notes from October 4, 2008:**

The EMC has since been renamed the BattCycle. A cooler, less nerdy (maybe) ring. I have used the BattCycle for commuting a few times since August. The bike is currently undergoing a repacking of the battery pack and a deep cleaning of the chain. New tires and painted rims are also in order. The project is about 90% finished and the bike will soon be registered and insured for totally legal operation.

**Performance data:**

I am currently keeping charging and Voc data for my pack and will be updating this report soon with such findings. As of October 4, 2008 and about a dozen full charge cycles, the batteries are very well balanced with series charging and seem to be holding a good, full charge.

**References:**

[1] www.electricmotorsport.com
[2] http://www.ben.cbccinc.com/BEM/BEM.htm
[3] http://endless-sphere.com/forums/
[4] http://www.electricrider.com/batteries/specsheets/eb50-12.pdf
[5] http://www.ev-america.com/
[6] http://www.quickcharge.com/Select-a-charge%20ON%20BOARD.htm
[7]http://batterytender.com/product_info.php?products_id=25&osCsid=9deded645587d00d8a3ea7b5a5135dc7
[8] Unlimited Motorcycle Parts, Stanton, CA

 

[9] http://www.batterytender.com
[10] www.superbrightleds.com
[11] http://www.electricmotorsport.com/store/downloads-Alltrax/axe-pm-wiring-diagram.pdf
[12] http://www.sandhillplastics.com/
[13] http://www.amazon.com
[14] http://www.elmoto.net
[15] http://www.bikerhiway.com/universal-turn-signal-flasher-relay-p-294.html

 